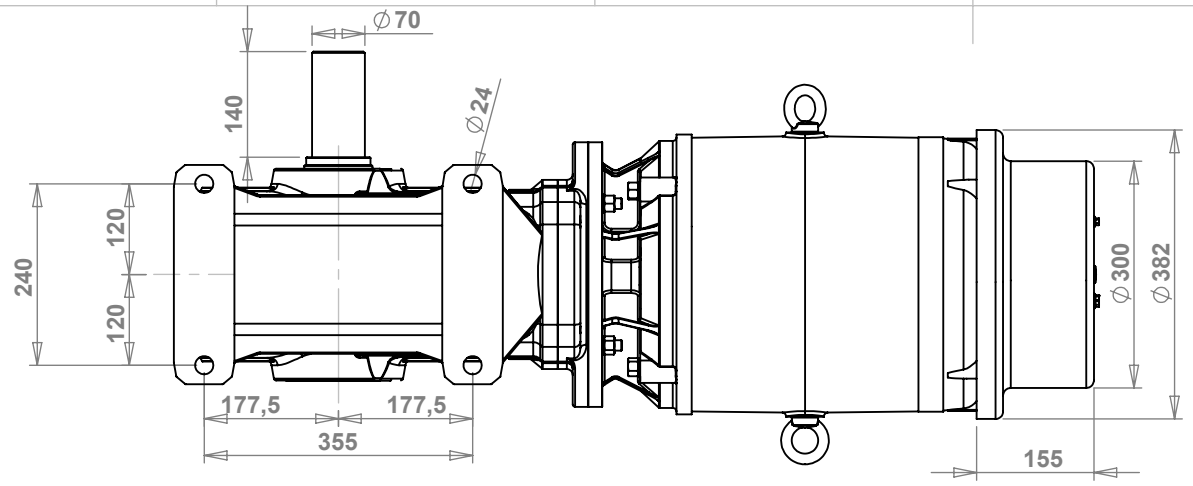

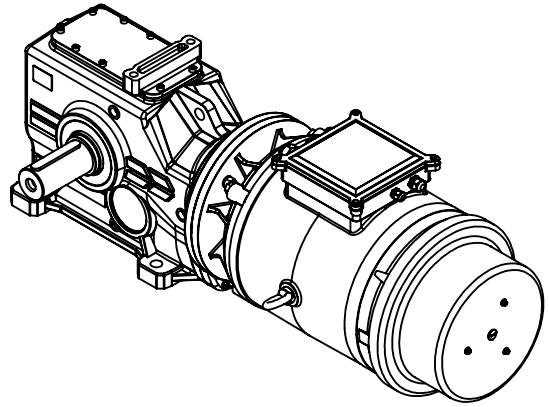

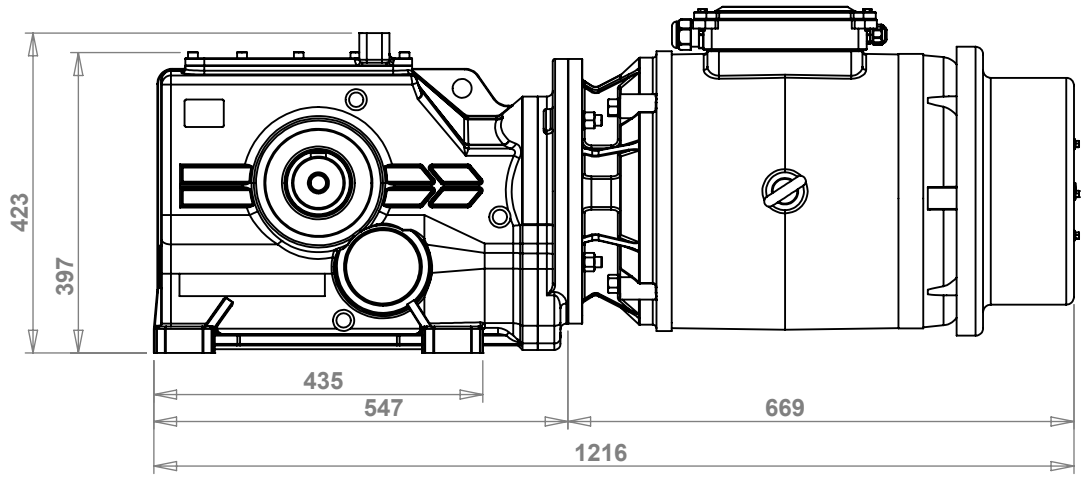

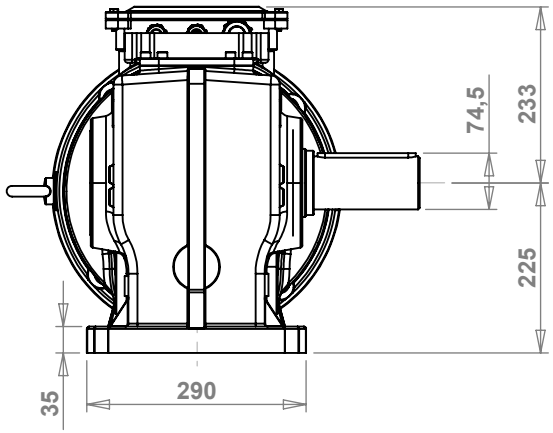

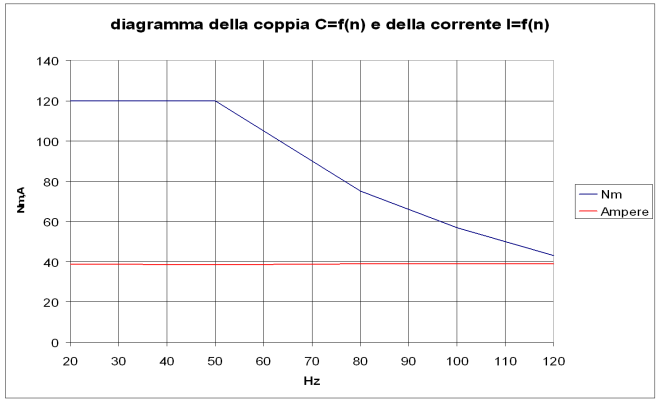

UNLESS OTHERWISE SPECIFIED: DIMENSIONS ARE IN MILLIMETERS SURFACE FINISH: TOLERANCES: LINEAR: ANGULAR:	FINISH:		DEBUR AND BREAK SHARP EDGES	DO NOT SCALE DRAWING	REVISION
				Besozzi elettromeccanica	
	NAME	SIGNATURE	DATE	TITLE:	
DRAWN	RC		03/07/2008	MOTORIDUTTORE BEK18-SE-1V KW18-400V-50Hz-i=22,9	
CHK'D	RC		03/07/2008		
APPV'D	RC		03/07/2008		
MFG					
Q.A			MATERIAL:	DWG NO.	A4
			-		
			WEIGHT: 220555.46	SCALE:1:20	SHEET 1 OF 1